Rear roller 600 (210-300)

MODUL-SYSTEM

27070-03

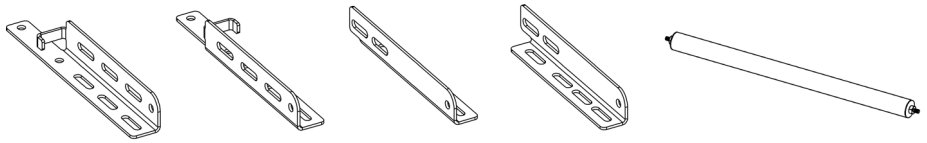

1 x 64373 | 1 x 64372 | 1 x 64376 | 1 x 64377 | 1 x Roller 600

2 x R6283 | 10 x M8x16 | 14 x M8 | 2 x M8 | 2 x R1053

!

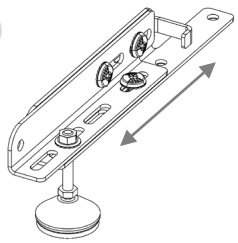

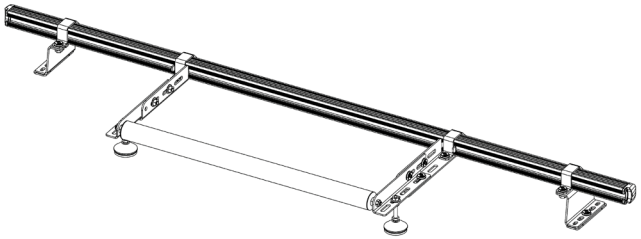

1

M8x16

M8

20Nm

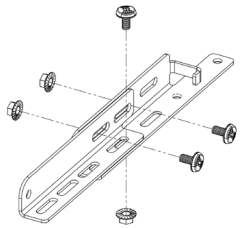

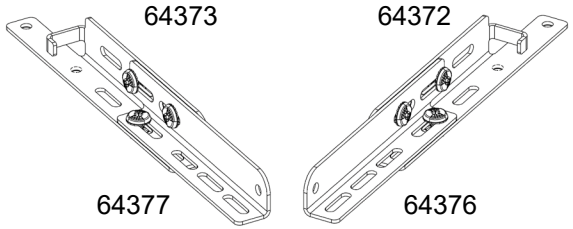

2

M8

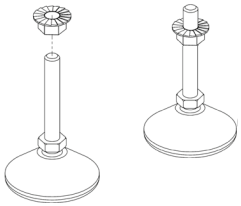

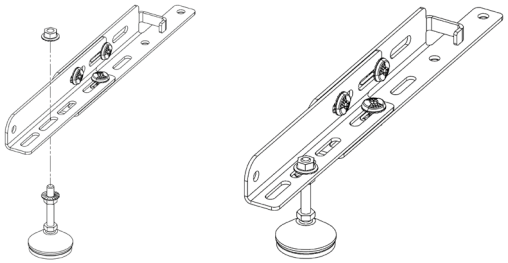

3

M8

20Nm

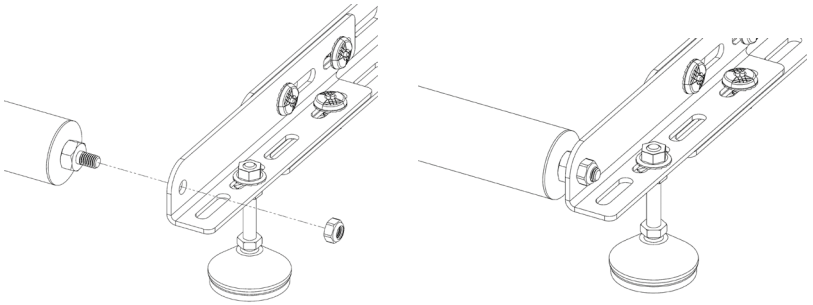

4

M8x16

M8

20Nm

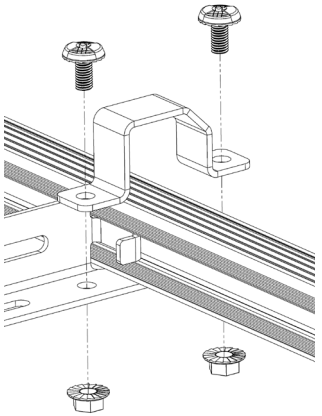

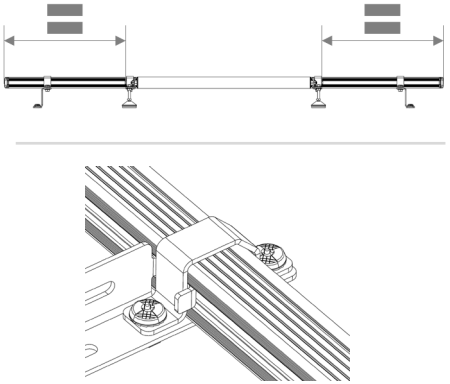

5

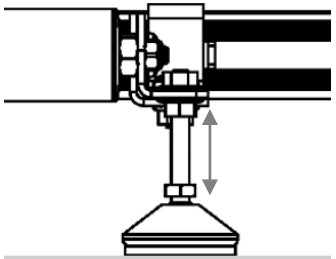
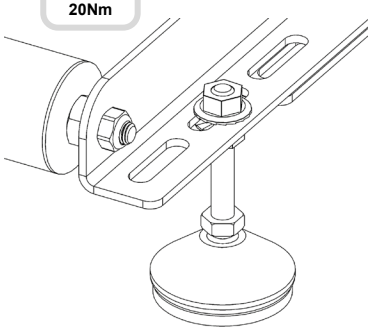
20Nm